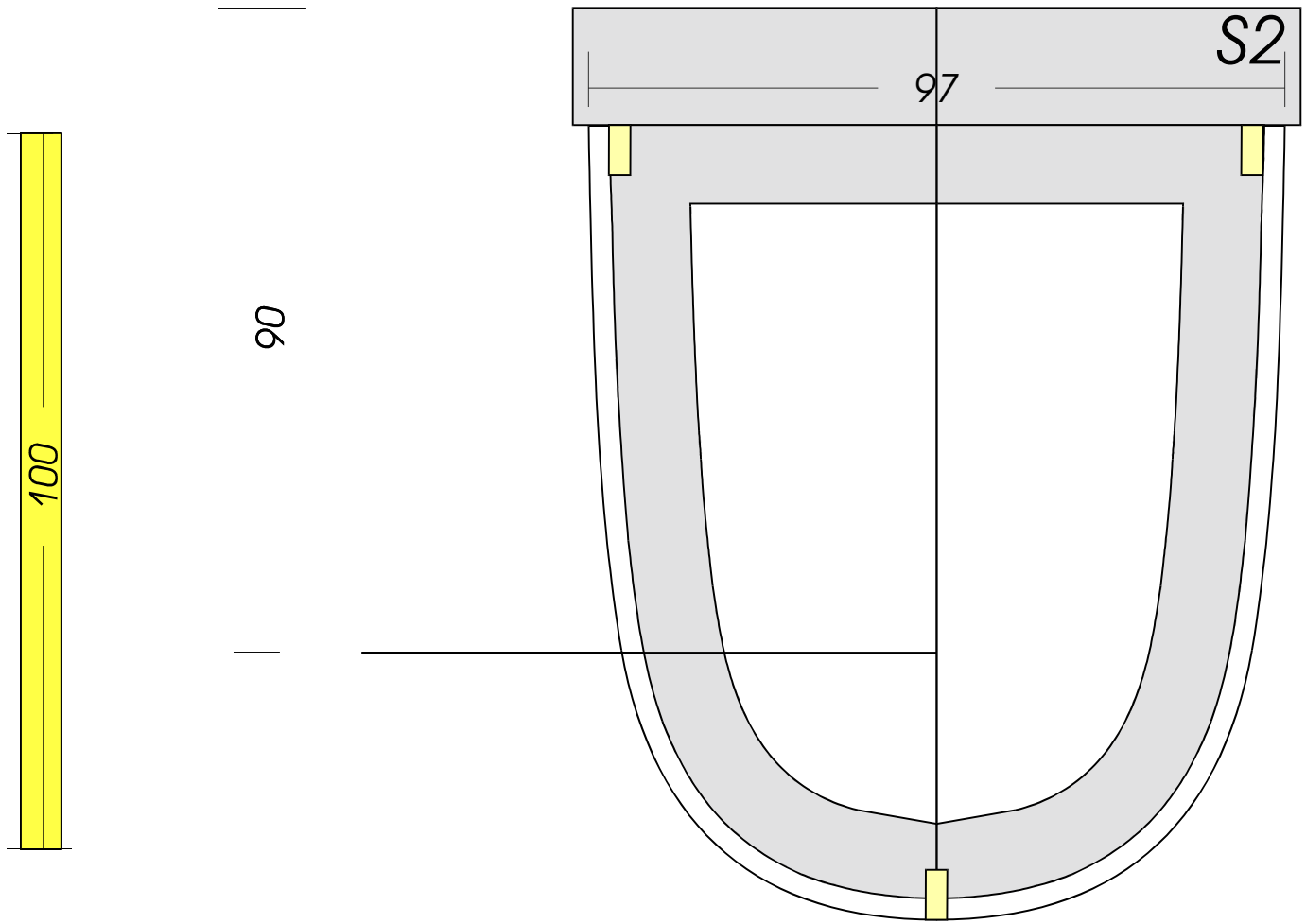

S2 Sport4