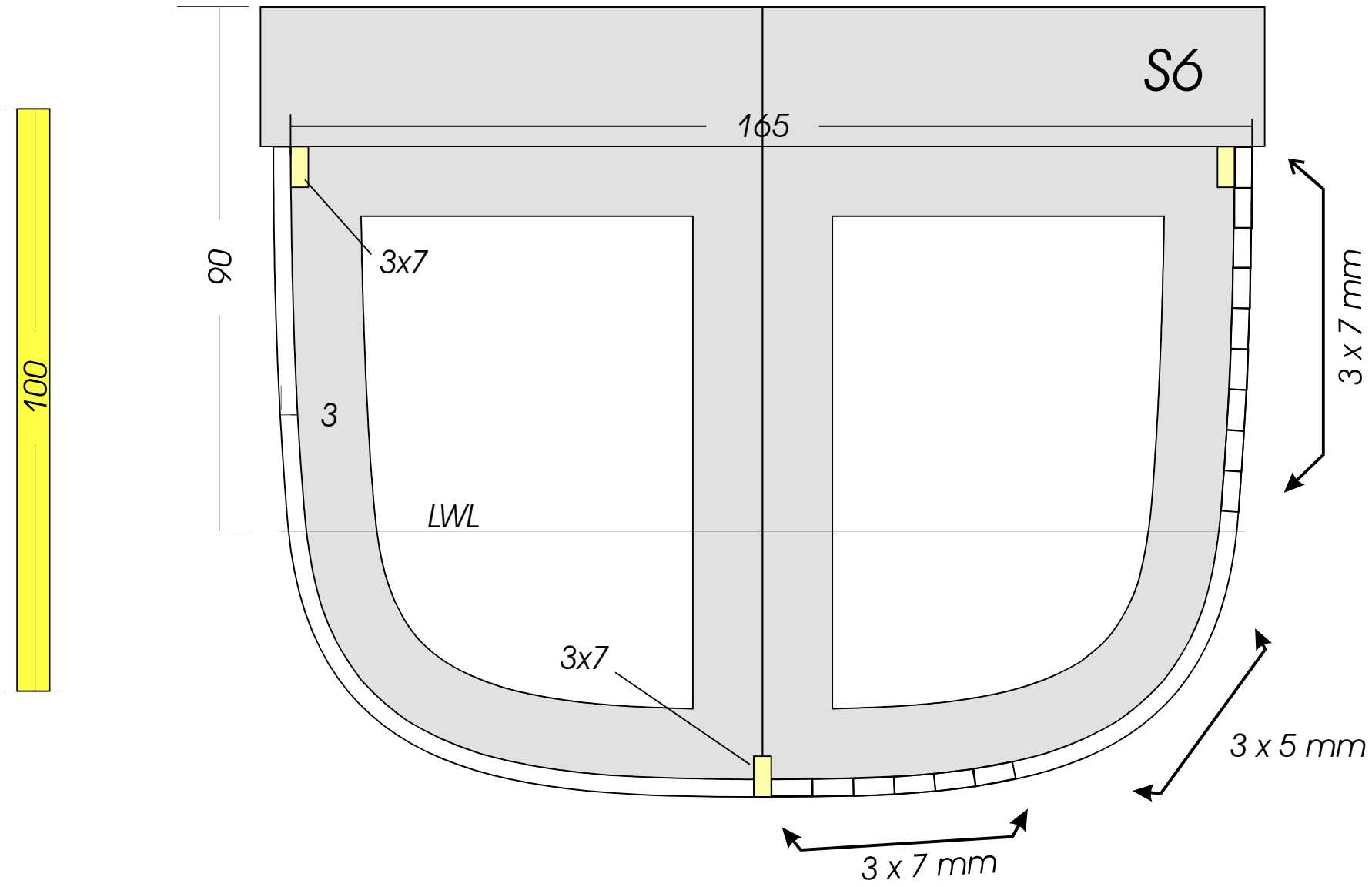

S6 Sport4